NORMAL TYPE

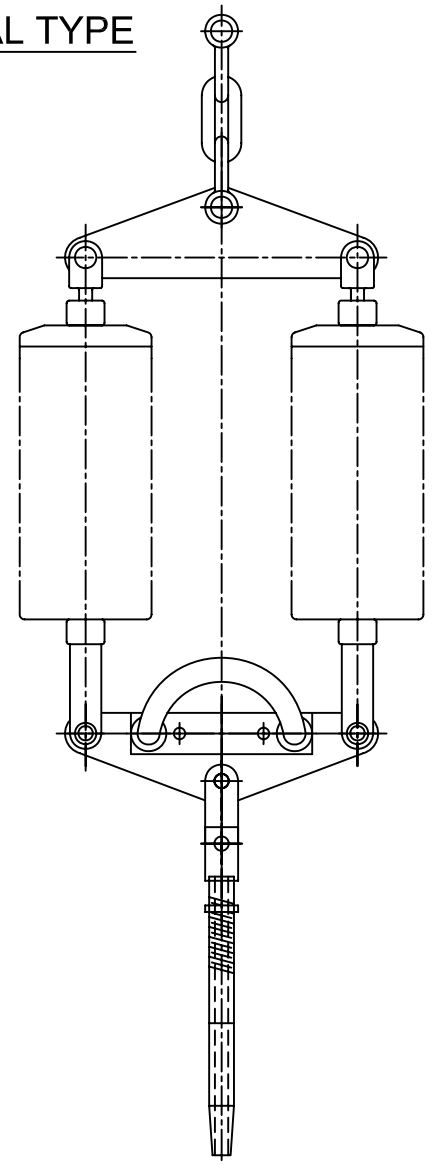

DOUBLE TENSION STRING

1

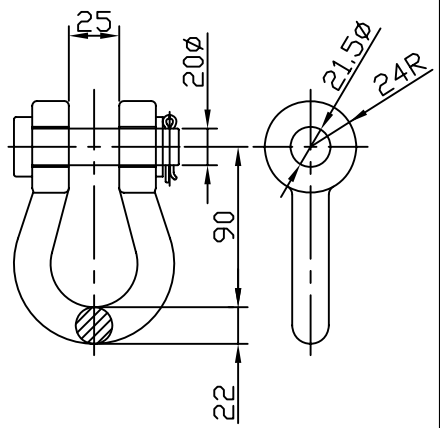

ANCHOR SHACKEL.

2

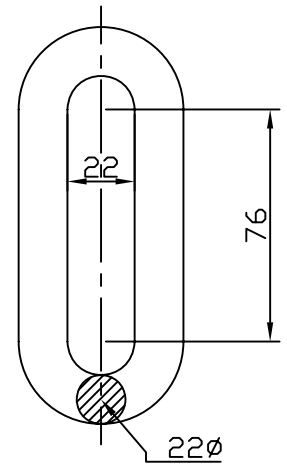

CHAIN LINK.

3

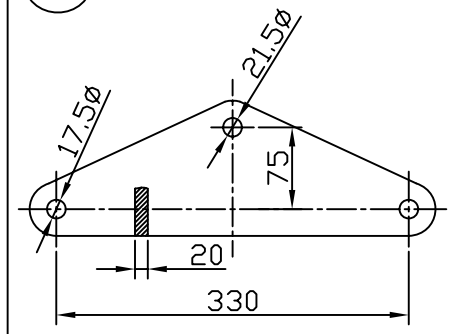

UPPER YOKE.

4

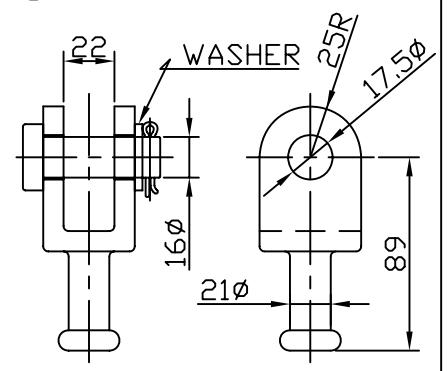

BALL CLEVIS

5

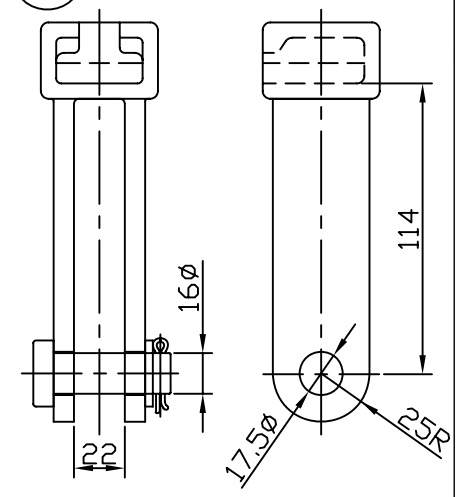

SOCKET CLEVIS

6

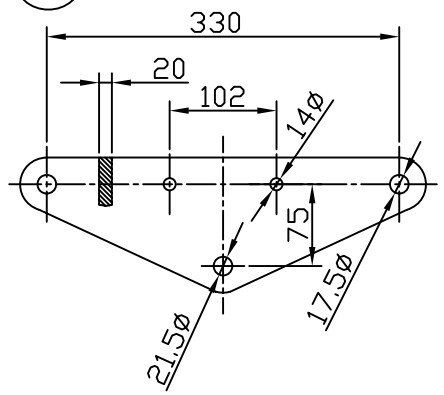

BOTTOM YOKE.

7

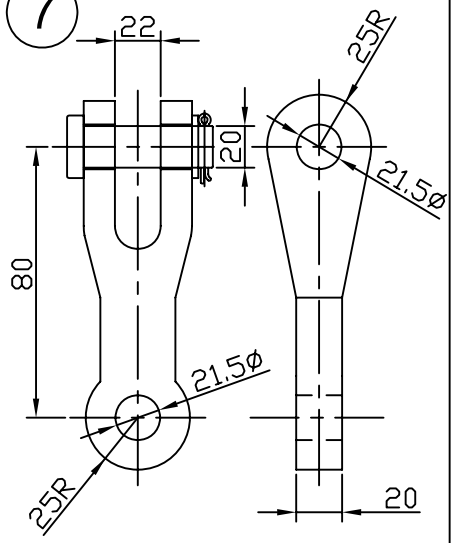

CLEVIS EYE.

8

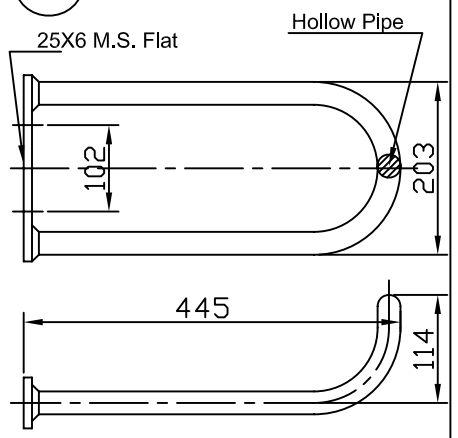

ARCING HORN.

8

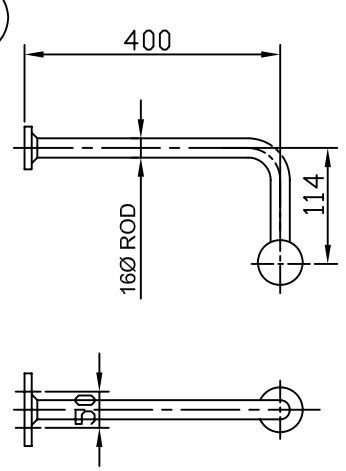

ARCING HORN.

11

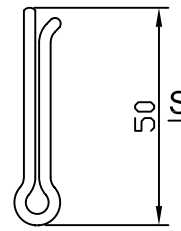

SPLIT PIN.

10

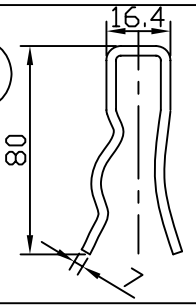

R -CLIP.

9

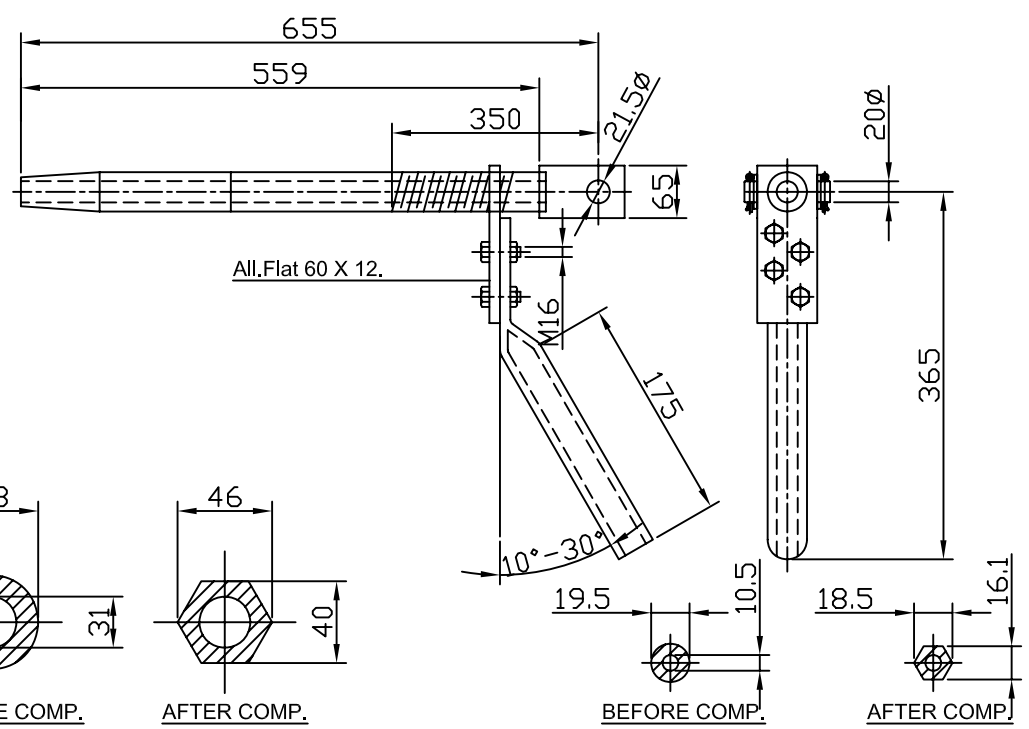

FOR ALUMINIUM SLEEVE.

FOR STEEL SLEEVE.

COMPRN. DEAD END.

SR. NO.	DESCRIPTION	QTY.	SPECIFICATION
11	SPLIT PIN.	8	BRASS / S.S.
10	R - CLIP.	2	PH. BRONZE / S. S.
9	COMPRN. DEAD END.	1	ALUMINIUM & STEEL.
8	ARCING HORN.	1	G.I. PIPE (HDG).
7	CLEVES EYE.	1	FORGED STEEL. HDG.
6	BOTTOM YOKE.	1	M. S. HDG.
5	SOCKET CLEVIS.	2	FORGED STEEL. HDG.
4	BALL CLEVIS.	2	FORGED STEEL. HDG.
3	UPPER YOKE.	1	M. S. HDG.
2	CHAIN LINK.	1	FORGED STEEL. HDG.
1	ANCHOR SHACKLE.	2	FORGED STEEL. HDG.

NOTES:-

1 - ALL DIMENSIONS ARE IN MM.

2 - DIMENSIONS NOT TO SCALE.

3 - GENERAL TOLERANCEN AS PER IS 2486

4 - M.F.L. 100% UTS OF ZEBRA CONDUCTOR.

5 - SLIP STRENGTH 95% ZEBRA CONDUCTOR

TENDER PURPOSE

GETCO

GUJARAT ENERGY TRANSMISSION CORPN.LTD.

S.P.VIDYUT BHAVAN, RACE COURSE,
VADODARA - 390 007

220KV Double Tension Hardware

REV:	DESCRIPTION:

DRAWN:	CHECKED:	APPD:	SIZE: A3
SCALE:	DATE:	DRG. NO: GETCO / E / 02L-STD / HW-031 / 002	SHEET: 1 OF 1 / REV: R0