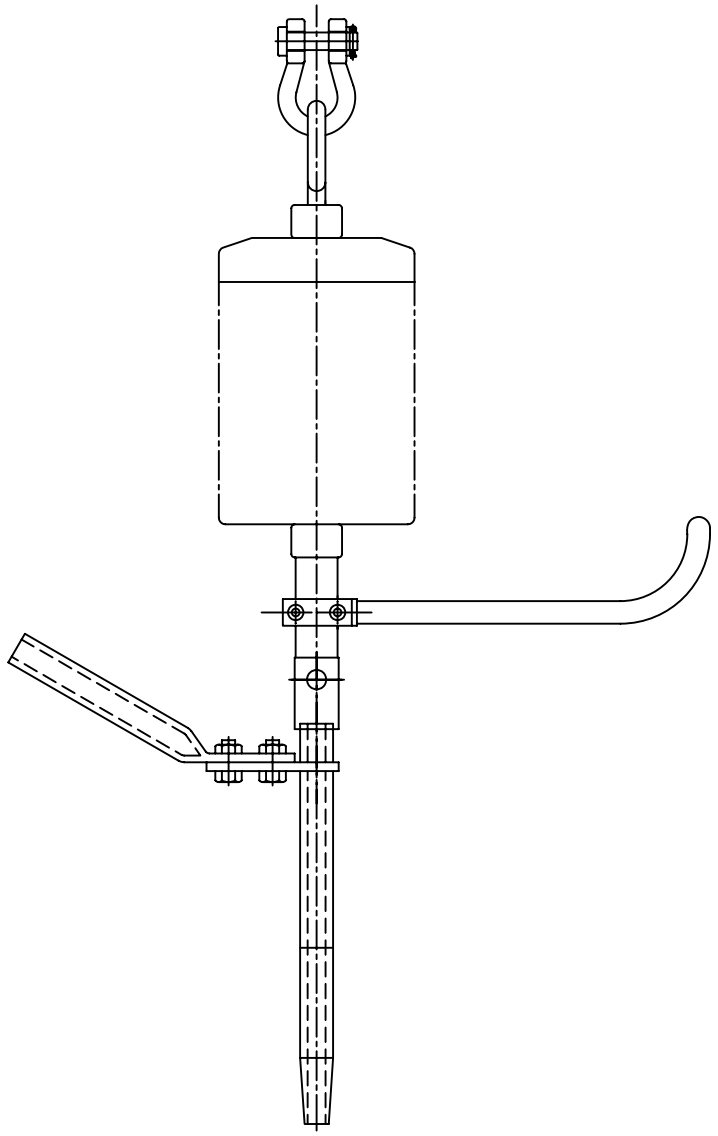

SINGLE TENSION STRING.

1

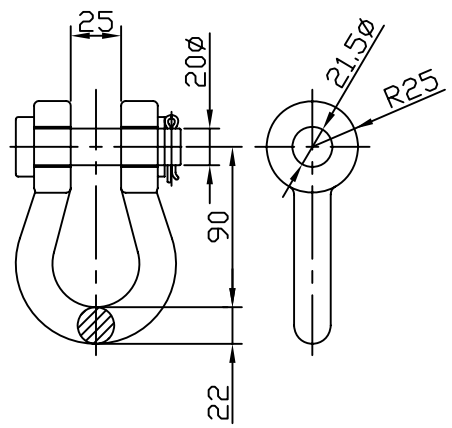


ANCHOR SHACKEL.

2

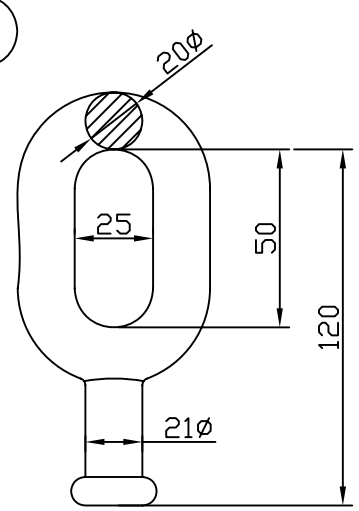


BALL LINK.

6

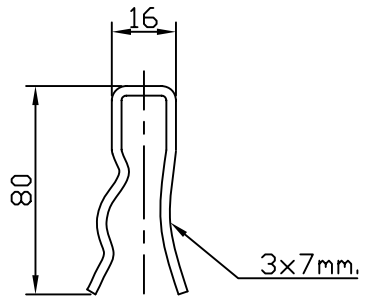


R -CLIP.

7

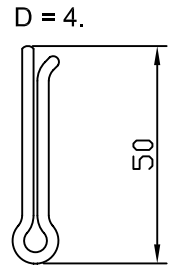


SPLIT PIN.

3

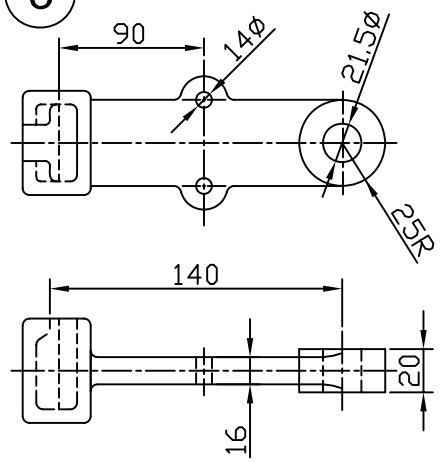


SOCKET EYE.

4

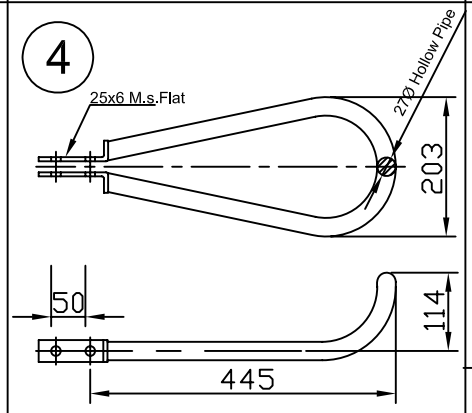


4

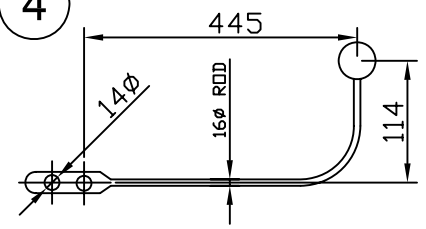


ARCING HORN. (Alternate).

NOTES:-

1 - ALL DIMENSIONS ARE IN MM.

2 - DIMENSIONS NOT TO SCALE.

3 - GENERAL TOLERANCEN AS PER IS 2486

4 - M.F.L. 100% UTS OF ZEBRA CONDUCTOR.

5 - SLIP STRENGTH 95% UTS OF ZEBRA CONDUCTOR.

| SR. NO. | DESCRIPTION | QTY. | SPECIFICATION |
|---|---|---|---|
| 7 | SPLIT PIN. | 2 | BRASS / S.S. |
| 6 | R - CLIP. | 1 | P.B. / S. S. |
| 5 | COMPRN. DEAD END. | 1 | ALUMINIUM & STEEL. |
| 4 | ARCING HORN PIPE TYPE | 1 | M. S. HDG. |
| 3 | SOCKET EYE. | 1 | FORGED STEEL. HDG. |
| 2 | BALL LINK. | 1 | FORGED STEEL. HDG. |
| 1 | ANCHOR SHACKLE. | 1 | FORGED STEEL. HDG. |

5

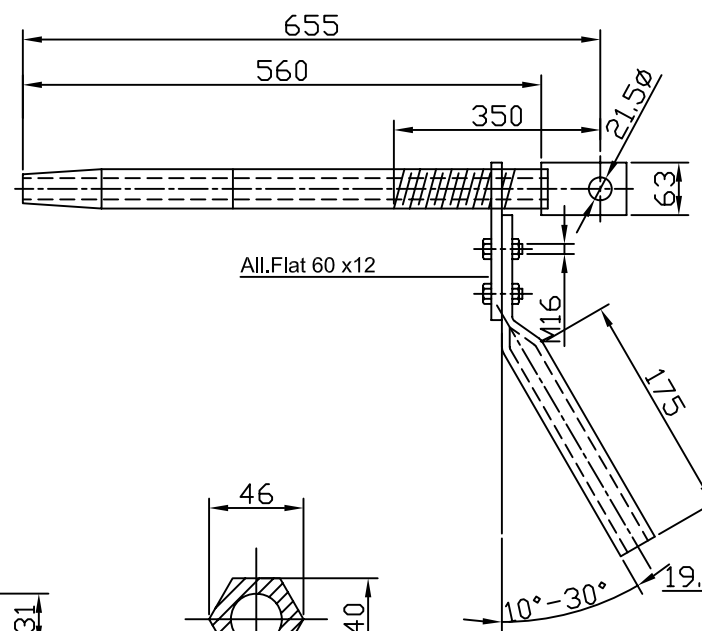


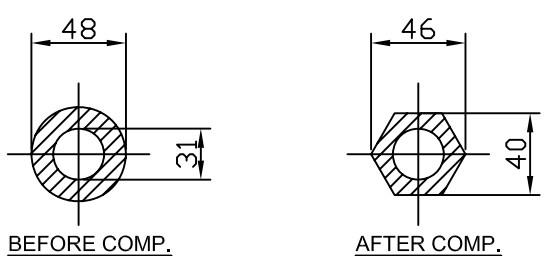


FOR ALUMINIUM SLEEVE.

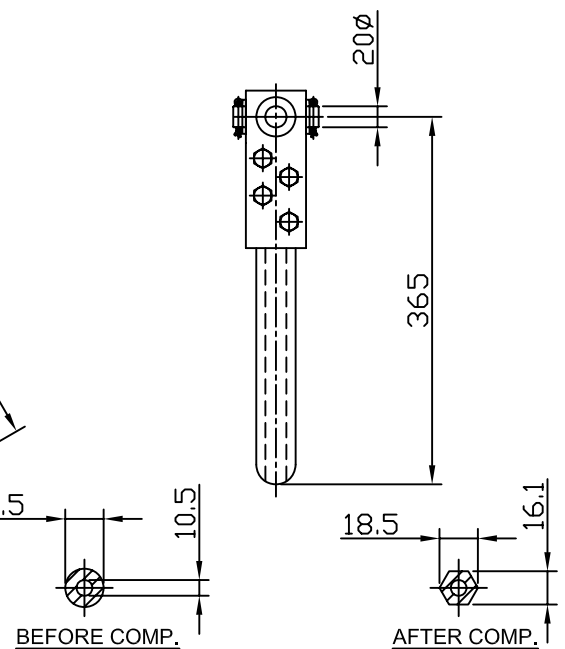


FOR STEEL SLEEVE.

COMPRN. DEAD END.

TENDER PURPOSE

**GUJARAT ENERGY TRANSMISSION CORPN.LTD.**

S.P.VIDYUT BHAVAN, RACE COURSE,
VADODARA - 390 007

**220KV Single Tension Hardware**

| REV: | DESCRIPTION: |
|---|---|
| | |
| | |
| | |
| | |

| DRAWN: | CHECKED: | APPD: | SIZE: A3 |
|---|---|---|---|
| SCALE: | DATE: | DRG. NO: **GETCO / E / 2L-STD / HW-031 / 004** | SHEET: 1 OF 1 / REV: R0 |